DRAWING REVISION BLOCK						
REV	ER	DESCRIPTION	DRAWN	CHECKED	APPROVED	DATE

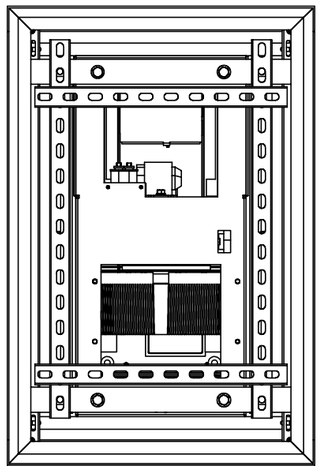

DL3B	DIMENSION AA
DL3B-7.5	15.000" [381mm]
DL3B-9.5	16.000" [406mm]
DL3B-11.0	17.000" [432mm]
DL3B-12.5	18.000" [457mm]
DL3B-14.0	19.000" [483mm]

NOTES:
* DIMENSION AA IS REQUIRED SPACE ABOVE CEILING
* COMPONENTS SHOWN ARE THE SHARP XG-P10, DL3B-7.5, AND OPT4
* UNIT CAN BE MADE TO FIIT A 2' X 3' TILE GRID
* CTB ROD LENGTH IS 9.1875"

UNISTRUT P1000 T CHANNEL
AND 1/2" THREADED ROD
(RECOMMENDED)

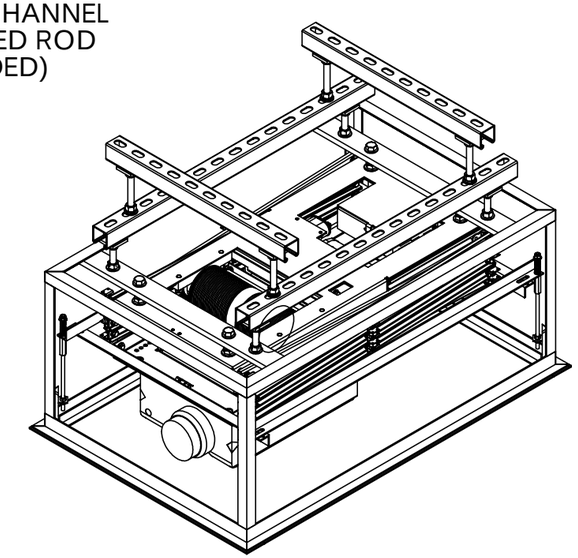

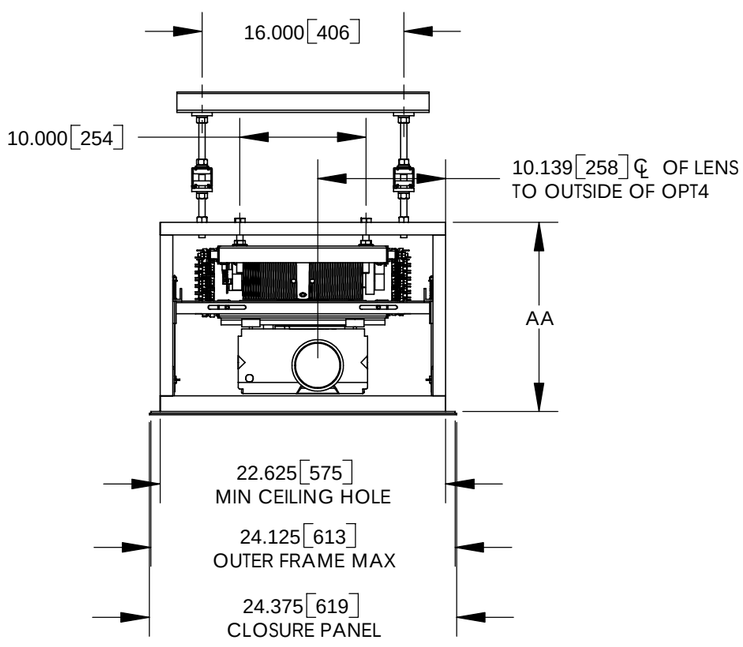

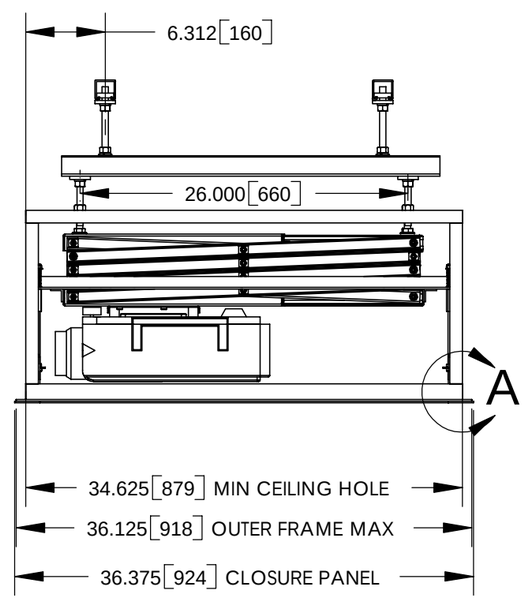

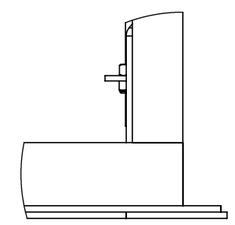

DETAIL A
SCALE 1 : 3

DISPLAY DEVICES INC.

THE INFORMATION CONTAINED IN THIS DRAWING IS THE PROPERTY OF DISPLAY DEVICES, INC. ANY REPRODUCTION IN PART OR WHOLE WITHOUT THE WRITTEN PERMISSION OF DISPLAY DEVICES, INC IS PROHIBITED

UNLESS OTHERWISE SPECIFIED DIMENSIONS ARE IN INCHES.
TOLERANCES:
.XX = ± .02
.XXX = ± .010
.XXXX = ± .0050
ANGLE = ± 0.5

DISPLAY DEVICES, INC
5880 SHERIDAN BLVD
ARVADA, CO 80003

TITLE: DL3B/OPT4/SHARP XG-P10

DRAWN: BAR	DATE: 11/8/2002	SIZE: B	DRAWING NO.: 315-017
CHECKED:	DATE:		REV: A
MATERIAL: NONE		SCALE: NONE	FILE NAME: 315-017.SLDDRW
FINISH: NONE			SHEET 1 OF 1